— Public use —

LUI | | | | | | | | | | |

Venue code | | | | |

School name

Given name/s

Family name

Attach your barcode ID label here

Sample assessment 2020

Question and response book

Chemistry

Paper 2

Time allowed

- Perusal time — 10 minutes
- Working time — 90 minutes

General instructions

- Answer all questions in this question and response book.
- Write using blue or black pen.
- QCAA-approved calculator permitted.
- QCAA formula and data book provided.

Section 1 (65 marks)

- 8 short response questions

Clear zone — margin trimmed off after completion of assessment

Queensland Government | QCAA Queensland Curriculum & Assessment Authority

DO NOT WRITE ON THIS PAGE

THIS PAGE WILL NOT BE MARKED

Section 1

Instructions

- If you need more space for a response, use the additional pages at the back of this book.
  - On the additional pages, write the question number you are responding to.
  - Cancel any incorrect response by ruling a single diagonal line through your work.
  - Write the page number of your alternative/additional response, i.e. See page …
  - If you do not do this, your original response will be marked.

DO NOT WRITE ON THIS PAGE

THIS PAGE WILL NOT BE MARKED

QUESTION 1 (8 marks)

The reaction between nitrogen gas (N_2) and oxygen gas (O_2) to produce nitrogen monoxide (NO) is given by the following equation.

$$N_2(g) + O_2(g) \rightleftharpoons 2NO(g) \qquad \Delta H = +181 \text{ kJ mol}^{-1}$$

When nitrogen gas and oxygen gas are mixed in a closed 1.00 L container, the concentration of each species can be measured at regular intervals. The graph below shows how the concentration of each species changes over time.

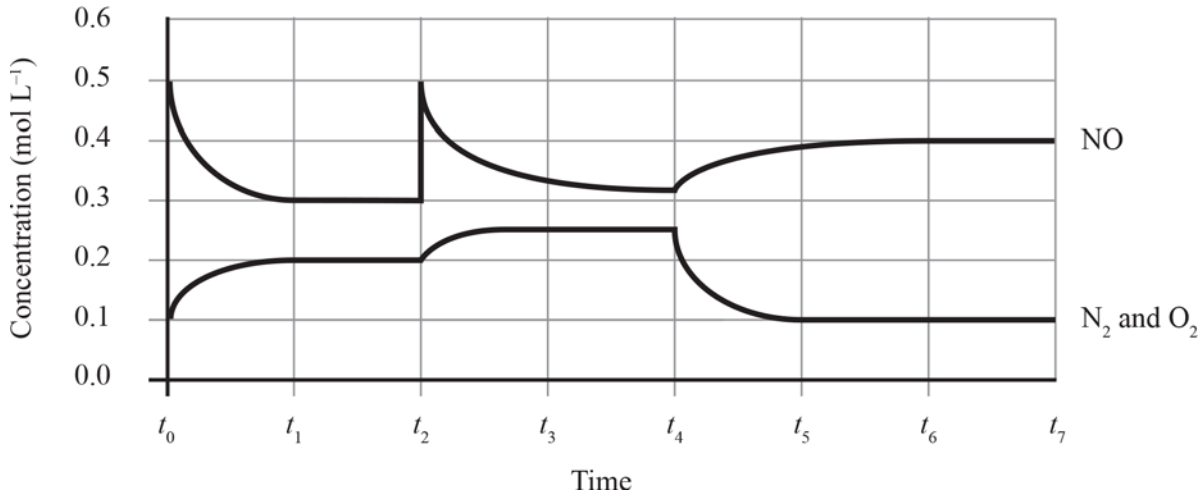

a) Identify the number of times that the system establishes equilibrium between t_0 and t_7. *[1 mark]*

b) Explain what effect a decrease in pressure at time t_7 would have on the position of equilibrium. Show your reasoning. *[2 marks]*

c) Predict the effect that an increase in temperature at time t_7 would have on the position of the equilibrium and the value of the equilibrium constant (K_c). Show your reasoning. *[3 marks]*

d) Calculate K_c for the above reaction when equilibrium is first established. Show your working. *[2 marks]*

K_c = _____

QUESTION 2 (8 marks)

When a carboxylic acid is reacted with an alcohol and an acid catalyst, an ester and water are formed by the reversible reaction shown below.

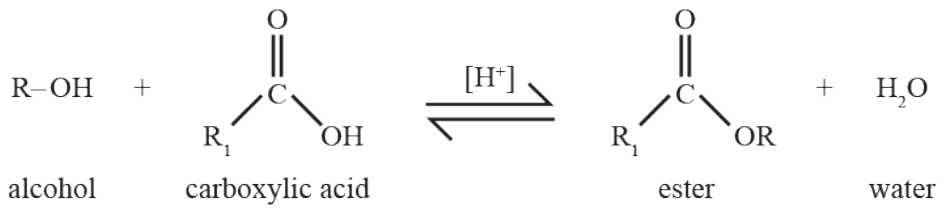

a) Use a balanced chemical equation for the hydrolysis of methyl ethanoate to explain that esterification is a reversible reaction. *[3 marks]*

b) Calculate the concentration of each of the components of the esterification reaction in 2a) at equilibrium if both the carboxylic acid and the alcohol had initial concentrations of 0.25 mol L^{-1}. The equilibrium constant (K_c) for the reaction is 4.0. *[5 marks]*

QUESTION 3 (9 marks)

The diagram below shows the structure of an electrolyser that produces hydrogen from renewable resources. The anode and cathode are separated by a selectively permeable membrane that allows the movement of ions.

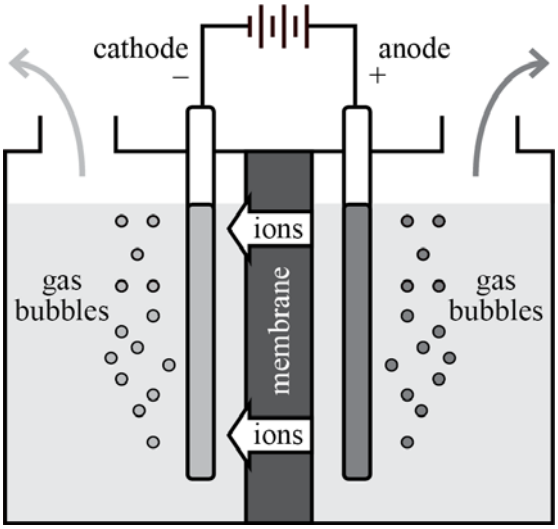

a) Identify the gas produced at the anode. *[1 mark]*

b) Describe the characteristic of the ions that causes them to move across the permeable membrane. *[1 mark]*

c) The diagram below represents a hydrogen fuel cell that uses hydrogen gas and oxygen gas to produce electricity.

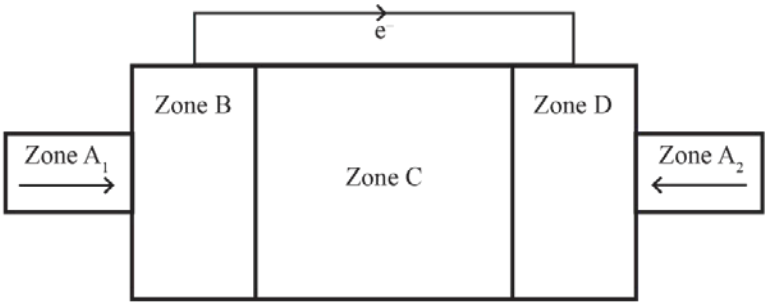

With reference to Zones A_1 and A_2, B, C and D, use the diagram above to discuss the operation of a hydrogen fuel cell with an alkaline electrolyte. *[4 marks]*

Zones A_1 and A_2: _____

_____

_____

Zone B: _____

_____

_____

Zone C: _____

_____

_____

Zone D: _____

_____

_____

d) Determine the oxidation and reduction half-equations and the overall reaction for the hydrogen fuel cell. *[3 marks]*

Oxidation half-equation: _____

Reduction half-equation: _____

Overall reaction: _____

QUESTION 4 (7 marks)

The diagram below represents an electrochemical cell that has been constructed by connecting two half-cells.

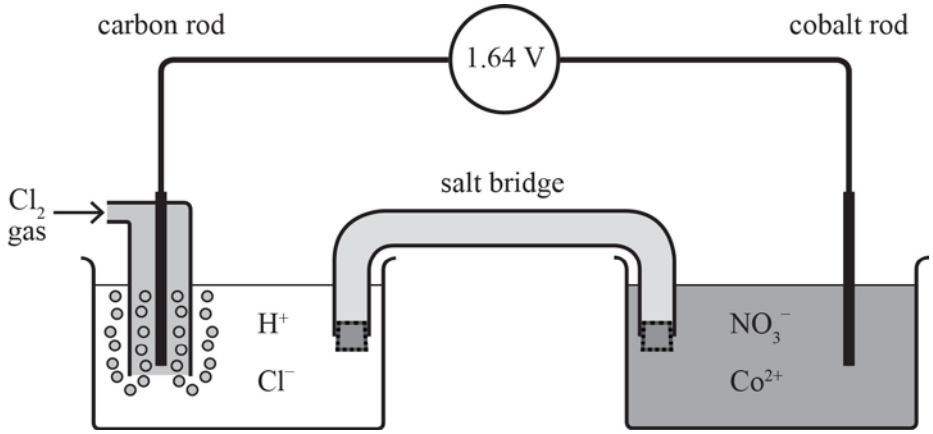

a) Identify the following by labelling the diagram above. *[3 marks]*

- the positive electrode (cathode) and negative electrode (anode)
- the direction of flow of electrons
- the movement of ions in the salt bridge

Note: If you make a mistake in the diagram, cancel it by ruling a single diagonal line through your work and use the additional diagram on page 16 of this question and response book.

b) Determine the standard electrode potential, E^o, for the cobalt(II)/cobalt half-cell above. *[4 marks]*

QUESTION 5 (7 marks)

Enzymes are globular proteins that can act as biological catalysts, with enzyme-catalysed reactions playing an important role in chemical industry.

a) Describe three characteristics of biological catalysts (enzymes). *[3 marks]*

b) Use a balanced chemical equation to describe the lipase-catalysed transesterification of triglyceride to produce biodiesel. *[4 marks]*

QUESTION 6 (9 marks)

The structural formulas for two amides are shown below.

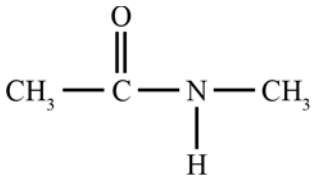

N-methylethanamide

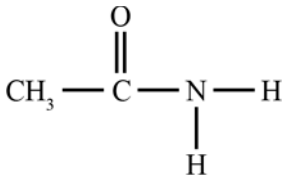

ethanamide

a) Identify the secondary (2°) amide above by drawing a circle around the peptide bond. *[1 mark]*

Note: If you make a mistake on these structures, cancel your response by ruling a single diagonal line through your work and use the additional formulas on page 17 of this question and response book.

b) Use a chemical equation to explain what products are formed by the hydrolysis of ethanamide under: *[4 marks]*

i) acidic conditions

ii) basic conditions.

c) Explain how N-methylethanamide can be produced from an alcohol and any other organic compound(s) of your choice. Include conditions and reagents in your response. *[4 marks]*

QUESTION 7 (7 marks)

An organic compound W undergoes several chemical reactions to form a new organic compound Z. The reactions that compound W undergoes to synthesise compound Z are shown in the table below.

W	X	Y
• Undergoes complete combustion to produce CO_2 and H_2O • Reacts with HBr in equimolar amounts to form compound X only	• Reacts with NaOH(aq) to produce compound Y	• Reacts with carboxylic acid to form compound Z

Molar mass of compound W = 42 g

Molar mass of compound Z = 102 g

a) Identify compound W by drawing its structural formula in the space below.
Show your reasoning. *[3 marks]*

b) Recall one test that could be used to confirm the identity of compound W. *[1 mark]*

c) Using chemical equations, deduce the reaction pathways involved in the synthesis of compound Z from compound W. *[3 marks]*

QUESTION 8 (10 marks)

Proteins can be hydrolysed to produce a mixture of amino acids, which can be separated using electrophoresis as shown below.

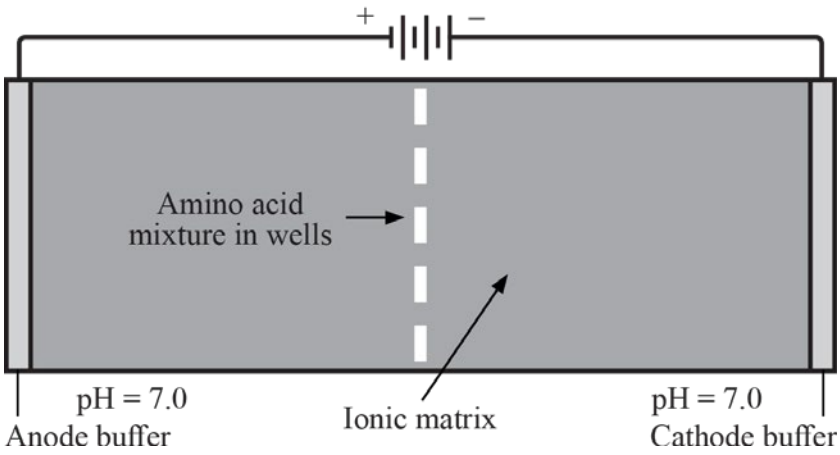

a) Explain how a mixture of alanine (Ala) and lysine (Lys) can be separated using electrophoresis and a buffer solution of pH 7. *[3 marks]*

b) In the space below, apply your understanding to draw the structural formula of a dipeptide formed by the condensation reaction of Ala and Lys. *[1 mark]*

c) Explain the secondary structure of proteins. *[6 marks]*

END OF PAPER

ADDITIONAL PAGE FOR STUDENT RESPONSES

Write the question number you are responding to.

ADDITIONAL PAGE FOR STUDENT RESPONSES

Write the question number you are responding to.

ADDITIONAL RESPONSE SPACE FOR QUESTION 4

If you want this diagram to be marked, rule a diagonal line through the diagram on page 7.

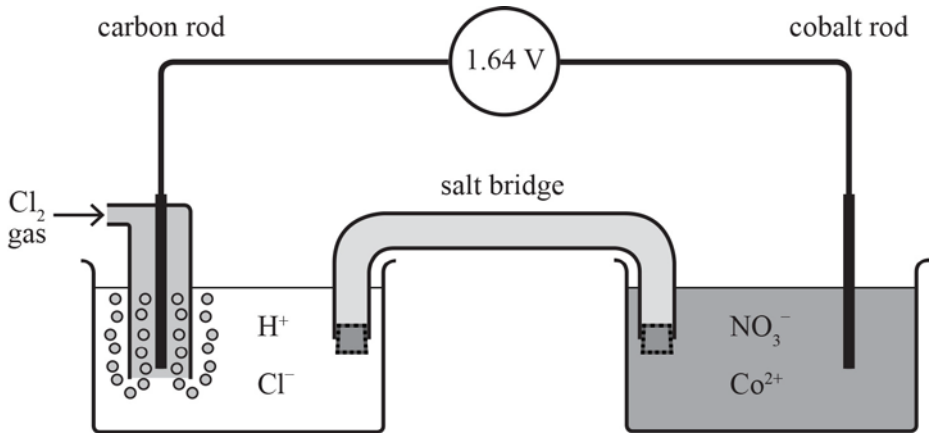

ADDITIONAL RESPONSE SPACE FOR QUESTION 6

If you want these structures to be marked, rule a diagonal line through the structures on page 9.

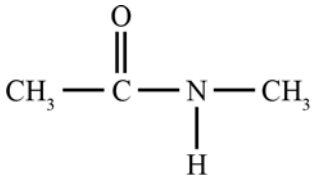

N-methylethanamide

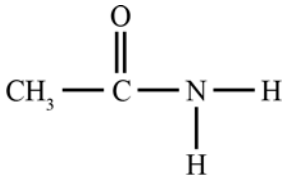

ethanamide

DO NOT WRITE ON THIS PAGE

THIS PAGE WILL NOT BE MARKED

DO NOT WRITE ON THIS PAGE

THIS PAGE WILL NOT BE MARKED